MIMO Prototyping System

Build the world's most versatile MIMO prototypes using a fully modular Massive MIMO system capable of real-time, two-way communications. Scale from small to large applications with an open, ready-to-run, FPGA-based, PHY layer software reference design.

Flexible Multi-User MIMO Framework Scales From 4 to 128 Antennas

Rapidly prototype small-scale MIMO and Massive MIMO systems with a single code base. The reconfigurable PHY layer reference design enables researchers to begin their MIMO prototyping with a few initial antennas and later expand to many more. Combine with NI SDR hardware to build a real-time, over-the-air communication system for advanced MU-MIMO research.

Reconfigurable OFDM-Based Protocols
- TDD communication
- 50 MHz–6 GHz RF center frequency
- 20 MHz bandwidth per channel
- 0.5 ms TDD period/duty cycle
- 12 supported simultaneous users

Ready-to-Run MU-MIMO Specific IP
- MMSE, MRC, ZF beamforming
- Channel reciprocity calibration
- Reconfigurable frame structure
- Over-the-air synchronization
- MIMO detection and precoding

Distributed Real-Time Processing
- Fully open LabVIEW source code
- Channel and link metric visualization
- Real-time IP across multiple FPGAs
- Flexible UI for on-the-fly configuration
- Video streaming for live demonstration

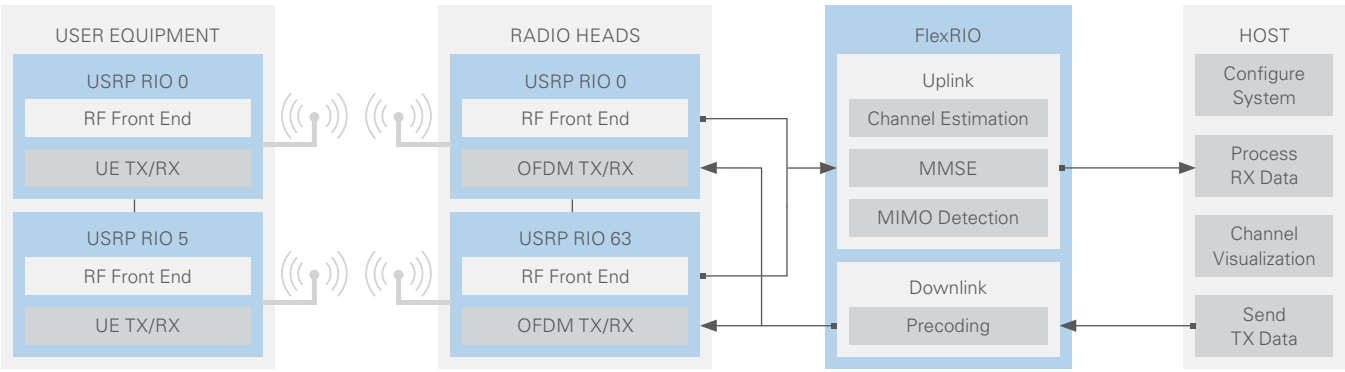

Ready-to-Run Massive MIMO PHY Layer
An advanced multi-FPGA based software reference design provides a complete real-time MU-MIMO PHY layer that can be used to rapidly prototype both small-scale MIMO and Massive MIMO systems and includes IP for both the multi-antenna base station and mobile stations.

Flexible, Scalable Hardware
The modular USRP RIO and PXI-based hardware architecture flexibly scales from four to 128 antennas without changes to the software reference design. Start small and grow the system to match your research needs through the completely open and reconfigurable FPGA and host code.

Accelerate Wireless Research
Massive MIMO technologies promise to revolutionize next-generation wireless communication systems. Consider the following new frontiers in MIMO research:

- High-mobility applications
- Reduced algorithm complexity
- Scheduling algorithms
- Optimized energy efficiency
- Distributed massive MIMO
- Hand-off between base stations
- Interference coordination
- Increased number of users
- Antenna geometry

Learn more at **ni.com/sdr/mimo**

©2016 National Instruments. All rights reserved. LabVIEW, National Instruments, NI, ni.com, NI FlexRIO, and USRP are trademarks of National Instruments. Other product and company names listed are trademarks or trade names of their respective companies. 26484