COPYRIGHT © 2009
NATIONAL INSTRUMENTS CORPORATION AND ITS LICENSORS. ALL RIGHTS RESERVED.

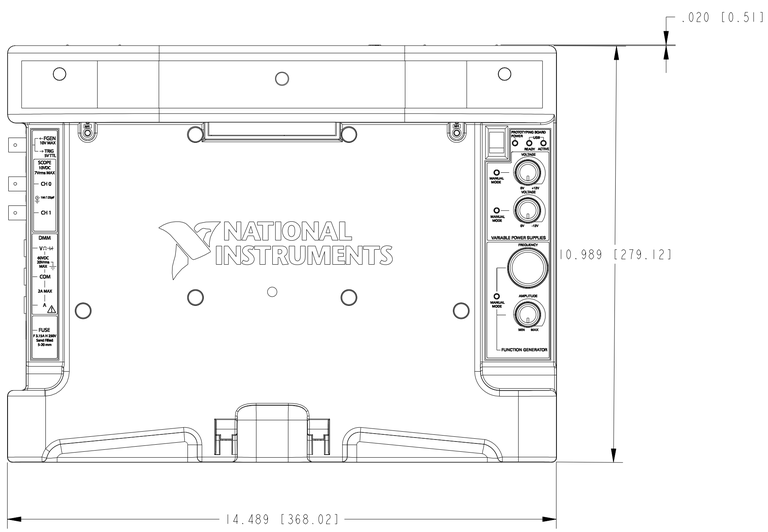

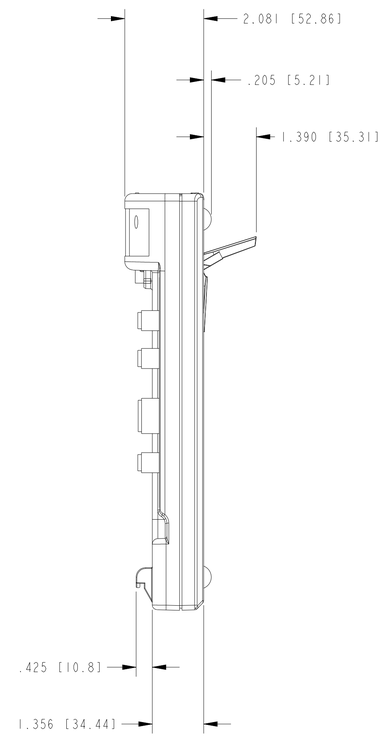

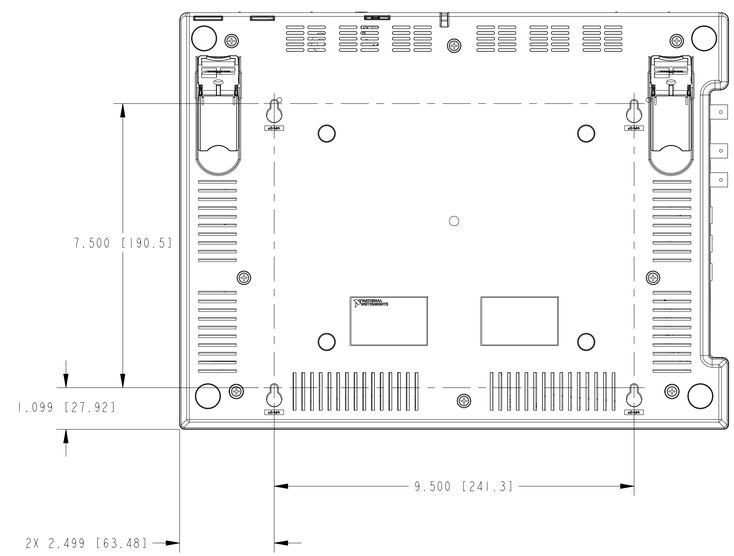

UNLESS OTHERWISE SPECIFIED DIMENSIONS ARE IN INCHES AND [MILLIMETERS].

DO NOT SCALE DRAWING

THIRD ANGLE PROJECTION

NATIONAL INSTRUMENTS® AUSTIN, TEXAS

TITLE

ELVIS II, INSTRUMENTATION, PROTOTYPING, AND TEACHING PLATFORM FOR LABS

SIZE	CODE IDENT NO	MM/DD/YYYY
D	7U296	03/20/09

SCALE: 1/1 SHEET 1 OF 1

CD_ELVIS2