Manufacturer: National Instruments

Board Assembly Part Numbers (Refer to Procedure 1 for identification procedure)**:**

Part Number and Revision	Description
146153B-01L or later (CCN: 05801)	mmRH-3608

Volatile Memory

Target Data	*Type*	*Size*	*Battery Backup*	*User Accessible*	*System Accessible*	*Sanitization Procedure*
Device Operation	FPGA	Xilinx XC6SLX9	No	No	Yes	Cycle Power
Device Operation	FPGA	Intel Max10 10M08	No	No	Yes	Cycle Power

Non-Volatile Memory (*incl. Media Storage*)

Target Data	*Type*	*Size*	*Battery Backup*	*User[1] Accessible*	*System Accessible*	*Sanitization Procedure*
Device configuration[2] • Device information • Calibration metadata	Flash	64MB	No	Yes	Yes	Procedure2
Device Enumeration • Data and Configuration Image	Flash	1MB	No	No	Yes	None
Control FPGA	FPGA	Intel Max10 10M08				
• User Flash Memory			No	No	Yes	None
• Configuration Image			No	No	Yes	None

[1] Refer to *Terms and Definitions* section for clarification of *User* and *System Accessible*
[2] Device configuration includes calibration constants that are normaly stored on the device during production at factory. These data include information for the device's full operating range. Any complications resulting from partial self-calibration can be eliminated by running a full calibration procedure.

Procedures

Procedure 1 – Board Assembly or Configuration Control Number identification:
To determine the Board Assembly Part Number or Configuration Control Number and Revision, refer to the label applied to the surface of your product. Your module will have either the Assembly Part Number or the Configuration Control Number. If your module lists the Assembly Part Number, it should be formatted as “P/N: 146153a-01L” where “146153” represents the module number and “a” is the letter module revision. If your module lists the Configuration Control Number it should be formatted as “CCN: 05801” where “5801” represents the module number.

Procedure 2 – Erasing the Device Configuration Flash Contents:

LabVIEW 2015, or newer versions supporting VRTS Libraries, must be used to execute the following procedures. The necessary library is located at <LabVIEW_DIR>\user.lib\niVRTS.

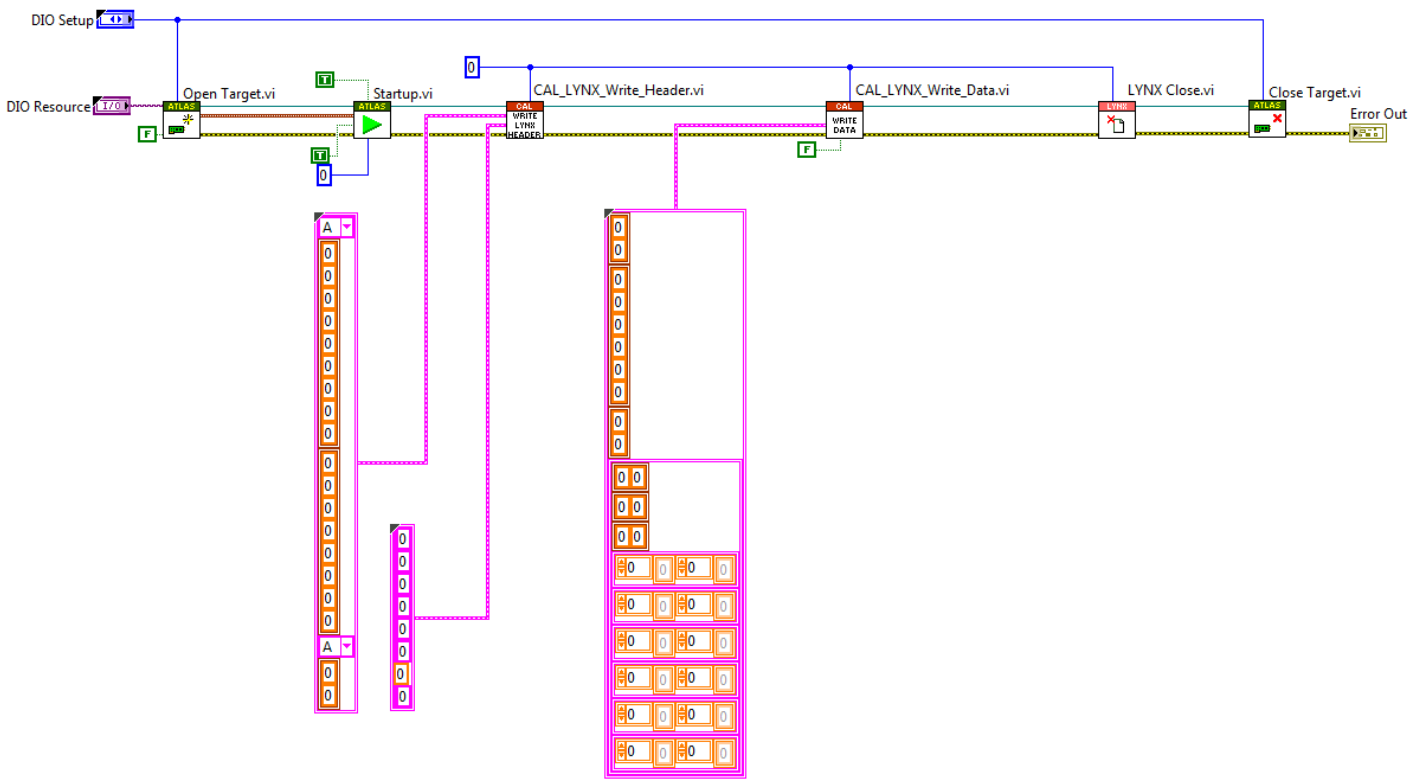

Fig: LabVIEW Block Diagram for Clearing the flash contents

1. Open a new LabVIEW VI.
2. Add OpenTarget VI to open a driver session
    a. Provide the resource name from Measurement and Automation Exploler (NI MAX) for the VST.
    b. Create a control at the “DIO Setup” port and set a value of ‘VST2’
    c. Createa a constant at the “Force Download” port and set a value of ‘False’
3. Add Startup VI
    a. Create a constant at the “Auto Enum” port and set a value of ‘True’.
    b. Create a constant at the “Link Dghtr” port and set a value of ‘False’
    c. Create a constant at the “Wait” port and set a value of ‘0’
    d. Connect the “Routing” port from OpenTarget VI to the “Routing” port on the Startup VI.
    e. Connect the “RefOut” port from OpenTarget VI to the “RefIn” port on the Startup VI.
    f. Connect the “Error Out” from OpenTarget VI to “Error In” on the Startup VI.
4. Add Cal_Lynx_Write_Header VI.
    a. Connect the “RefOut” port from Startup VI to the “RefIn” port on the Cal_Lynx_Write_Header VI.
    b. Connect the “Error Out” from Startup VI to “Error In” on the Cal_ Lynx _Write_Header VI.
    c. Create a zero constant at the “HW Config” port.
    d. Create a zero constant at the “Lynx Header” port.
    e. Create a constant at the “Serial Number” port and set a value of ‘0’
5. Add Cal_Lynx_Write_Data VI.
    a. Connect the “RefOut” port from Cal_Lynx_Write_Header VI to the “RefIn” port on the Cal_Lynx_Write_Data VI.
    b. Connect the “Error Out” from Cal_Lynx_Write_Header VI to “Error In” on the Cal_Lynx_Write_Data VI.
    c. Create a zero constant at the “Lynx Data” port.
    d. Create a constant at the “Update Cal Date” port and set a value of ‘False’
    e. Create a constant at the “Serial Number” port and set a value of ‘0’
6. Add Lynx_Close VI
    a. Connect the “RefOut” port from Cal_Lynx_Write_Data VI to the “RefIn” port on the Lynx_Close VI.
    b. Connect the “Error Out” from Cal_Lynx_Write_Data VI to “Error In” on the Lynx_Close VI.
    c. Create a constant at the “Serial Number” port and set a value of ‘0’
7. Add Close Target VI
    a. Connect the “RefOut” port from Cal_VDG_Write_Data VI to the “RefIn” port on the Close Target VI.
    b. Connect the “Error Out” from Cal_VDG_Write_Data VI to “Error In” on the Close Target VI.
    c. Create a “Error Out” indicator.

Caution: This erase procedure renders the module inoperable the driver will report a fatal error if any configuration is attempted without restoring the data. If you want to use a module again after erasing the Calibration Flash without having stored a copy of the original flash contents, contact National Instruments for information about costs and procedures to return the module to the factory for repair.

Terms and Definitions

Cycle Power:
The process of completely removing power from the device and its components and allowing for adequate discharge. This process includes a complete shutdown of the PC and/or chassis containing the device; a reboot is not sufficient for the completion of this process.

Volatile Memory:
Requires power to maintain the stored information. When power is removed from this memory, its contents are lost. This type of memory typically contains application specific data such as capture waveforms.

Non-Volatile Memory:
Power is not required to maintain the stored information. Device retains its contents when power is removed. This type of memory typically contains information necessary to boot, configure, or calibrate the product or may include device power up states.

User Accessible:
The component is read and/or write addressable such that a user can store arbitrary information to the component from the host using a publicly distributed NI tool, such as a Driver API, the System Configuration API, or MAX.

System Accessible:
The component is read and/or write addressable from the host without the need to physically alter the product.

Clearing:
Per *NIST Special Publication 800-88 Revision 1*, "clearing" is a logical technique to sanitize data in all User Accessible storage locations for protection against simple non-invasive data recovery techniques using the same interface available to the user; typically applied through the standard read and write commands to the storage device.

Sanitization:
Per *NIST Special Publication 800-88 Revision 1*, "sanitization" is a process to render access to "Target Data" on the media infeasible for a given level of effort. In this document, clearing is the degree of sanitization described.